Rapid Air
Operating Instructions

SBX Straightener

6/01

4601 Kishwaukee Street, Rockford, IL 61109
815-397-2578

INDEX

1. Straightener Layout Sheet	**Pg. 3**
2. Platen Adjustment Bulletin	**Pg. 4**
3. Installation	**Pg. 5**
4. Start-Up Procedure	**Pg. 5**
5. Electrical Controls Layout	**Pg. 8**
6. Dancer Arm Adjustment Explanation	**Pg. 10**
7. Standard and Optional Components	**Pg. 11**
8. Operations	**Pg. 12**
9. Maintenance	**Pg. 13**
10. Trouble Shooting Guide	**Pg. 14**
11. Taut Stock Explanation	**Pg. 16**
12. Electrical Schematics	**Pg. 26**
13. Mechanical Parts List	**Pg. 29**
14. Typical Stamping Layout	**Pg. 32**

UNIT	"A"	"B"	"C"	"D"
SBX-4	28.0	20.0	46.5	40.5
SBX-8	28.0	26.0	46.5	40.5
SBX-12	28.0	26.0	46.5	40.5

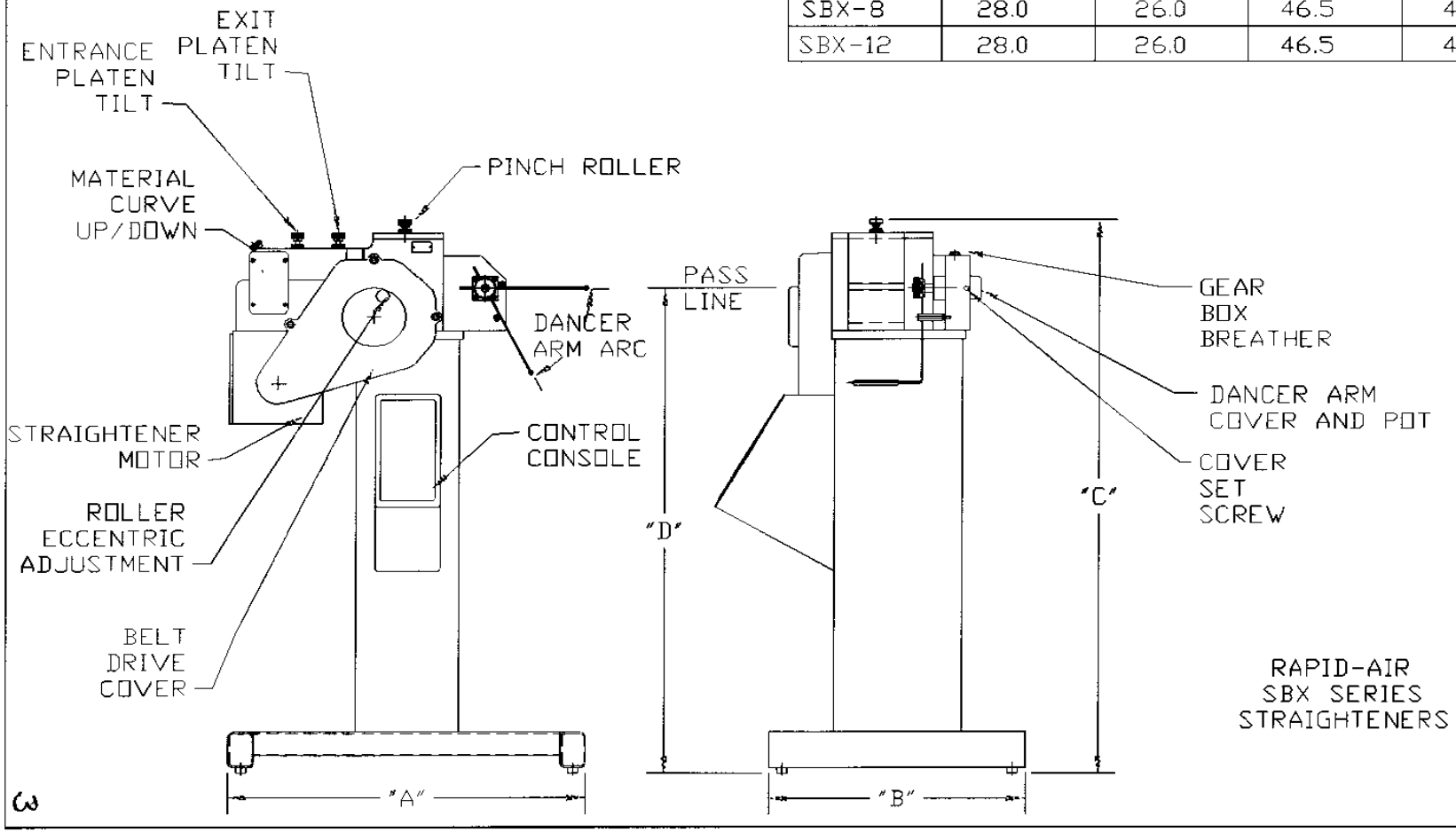

RAPID-AIR
SBX SERIES
STRAIGHTENERS

Tech Bulletin

No. 180

Adjustable Platen Stock Straighteners vs. Straighteners with Traditional Vertical Roll Adjustment

CONCEPT: The concept behind a movable platen containing the upper bank of rolls for straighteners can be somewhat difficult to grasp, but once the principles are understood the superiority of this system becomes obvious. To explain the differences between the adjustable platen system and one that uses traditional single-point vertical roll adjustment, we are describing both types of systems here.

VERTICALLY ADJUSTABLE UPPER ROLLS: For centuries the bending of materials has been done by variations of a three-roll arrangement as illustrated in **Figure 1**.

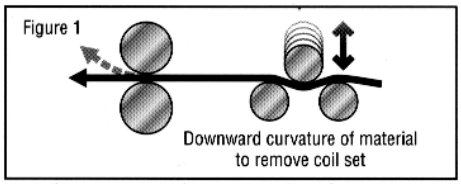

Bending occurs when one roll is forced into the space between the other two rolls for downward curvature of the material to remove coil set. Pressroom straighteners add multiple three-roll combinations in order to level the material in small increments at each stage. This method can provide acceptable results for some materials, but is limited because correction of material curvature is effective in only one direction as illustrated in **Figure 2**.

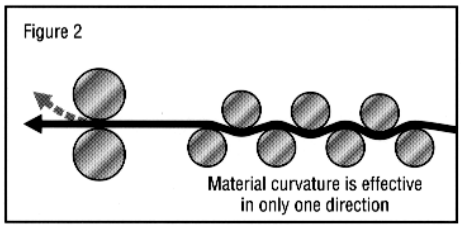

If the straightener is made to correct a clockwise curvature, it is often impossible to correct a counterclockwise curvature. The only available adjustment is the variation of the degree of bend at each station. This is true even for straighteners that have banked upper rolls that pivot for two-point adjustment.

SIX-WAY UPPER ROLL ADJUSTMENT: After manufacturing straighteners with vertically adjustable rolls for many years, RapidAir developed and patented the adjustable platen type straightener as illustrated in **Figure 3**.

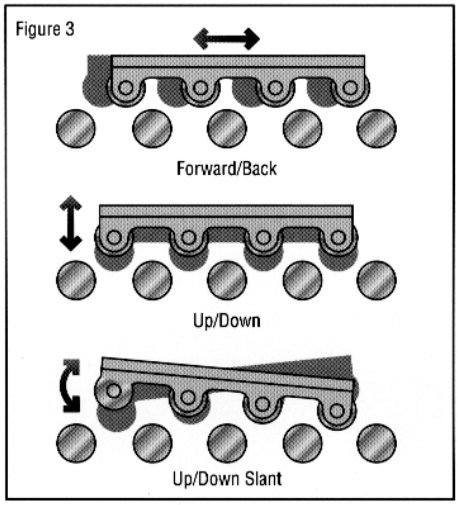

This design mounts the upper rolls in a platen which can be adjusted for *degree of bend* as illustrated in **Figure 4** and **Figure 5**

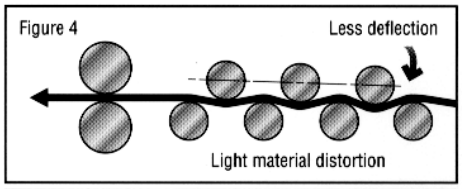

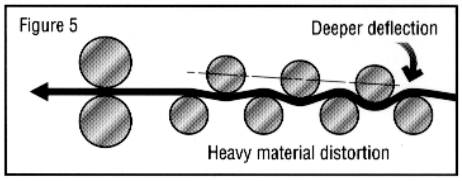

and for *curvature direction* as shown in **Figure 6** and **Figure 7**.

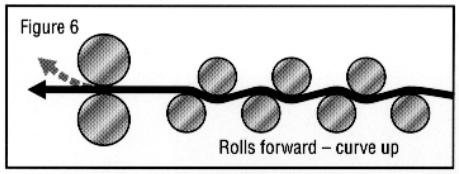

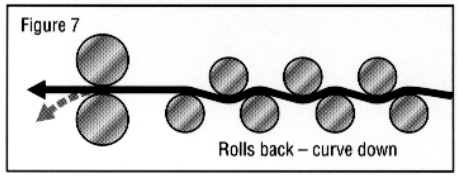

To more easily explain the concept, **Figure 8** shows a three-roll combination with the upper roll forward and **Figure 9** shows a three-roll combination with the upper roll to the rear.

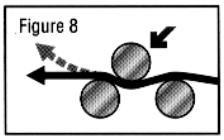

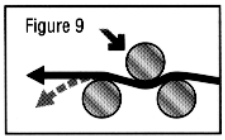

Notice that the sharpest bend occurs where two rolls are in close proximity. When the upper roll is forward, the curvature will be up and when the forward roll is adjusted to the rear, the bend will be down. The degree of bend can be adjusted by a combination of vertical and horizontal adjustments.

ADVANTAGES: The high degree of flexibility afforded by the adjustable platen design provides a predictable straightening method for a wide variety of materials and takes a lot of the "Black Magic" out of pressroom straightener setup. The reduction in the flexing and distortion of the strip of material and the reduction of the straightening power required allows effectiveness with heavy materials. Additionally, the ability to place rolls in a proper close proximity allows effective straightening with very thin materials.

ROLL DIAMETER: The smaller the roll diameter in a straightener the better it is able to remove distortions in the strip of material, but this factor is compromised by the requirement of larger rolls in wider models of straighteners in order to prevent deflection of the rolls themselves. RapidAir straighteners are designed to optimize all factors (including number of rolls, diameter and position) within the published material capacities and specifications for each model.

SWING-OPEN TOP: RapidAir developed and introduced the swing-open top for straighteners in order to facilitate the cleaning of rolls and the threading of a new strip of material through the straightening rolls. For convenience and safety, each top is counterbalanced and held in the open position until it is clamped for operation. Roll adjustment settings are maintained when the top is closed and locked.

AVAILABILITY: All models of RapidAir straighteners are presently available with the adjustable platen design with an expanded range of models being introduced in the coming months.

SBX SERIES POWERED STRAIGHTNER

INSTALLATION

The straightener that you just received is fully assembled and tested and ready to be put into position. ***CAUTION:*** Due to shipment vibration, the straightener should be checked to be sure that all screws and bolts are secure and all electrical components are in place inside the cabinet. Visually inspect the complete machine for physical damage due to shipment and handling. If the straightener was damaged in shipment, contact the carrier first and then Rapid Air.

Install the straightener on a level surface with sufficient clearance for loading the material and adjusting the roller pressure for straightening. Align and center the straightener to the device that it will be supplying the straightened stock. The straightener should then be bolted to the floor especially when used to pull stock from a non-powered reel.
CAUTION: Before bolting the straightener down, check for the longest feed length to be run. The straightener should be set so that there will be about two or three feed lengths in storage in the loop without re-inducing coil set in the material.

The standard speed straightener is completely self contained and only needs to be plugged into a 20 amp, 120 VAC, 60 HZ outlet. If an extension cord is used as a source to the straightener power, it should be a minimum 12 gauge wire to keep the voltage losses down and also for electrical safety reasons.
Please check your local safety codes.

The medium and high speed straighteners require 230 VAC, 60 HZ, 1PH as the supply voltage. Please refer to the schematics in the manual for required fuse sizes.
Please check your local safety codes.

Turn on the main power button and run a test cycle checking the jog (using the jog button) and run (using the dancer arm to test that the speed varies if using the proportional control). Test all electrical features before continuing.

START UP PROCEDURE

Prior to applying power to the straightener, all the controls on the machine should be reviewed. A brief summary is listed on the next page.

MAIN CONSOLE AND CONTROLLER

The main control console with controls is mounted on the cabinet of the straightener. Located on the face of the console are five switches, one potentiometer, one push-button and one or two circuit breaker reset switches, which are explained below.

1. ON/OFF SWITCH

This illuminated switch is the main power switch for the controller. On the 120 VAC straighteners, it will be a toggle switch and on the 230 VAC version it will be a mushroom push-button. It must be "ON" for the straightener to function.

2. RESET BUTTONS (circuit breaker)

120 VAC.

- **A.** 15 amp—This is the main circuit breaker for the straightener.
- **B.** 3 amp—This is the main circuit breaker for the "D-SUB" (25 pin) connector. Any shorting or overloads would trip this breaker.

240 VAC.

- **A.** 3 amp—This is the main circuit breaker for the "D-SUB" connector. Any shorting or overloads would trip this breaker.

3. RUN/STOP/JOG SELECTOR SWITCH

A. If **"RUN"** was selected and the dancer control arm was raised, the straightener rolls would rotate.

If **"STOP"** was selected then none of the functions would work.

If **"JOG"** was selected then the jog button has to be depressed to have the straightener rolls rotate.

4. JOG BUTTON

Used for intermittent movement of the straightener rolls and mainly for setup. The jog speed can be adjusted by rotating the **R3** potentiometer on the 69100079 board in the control sub-panel.

5. % SPEED POTENTIOMETER

The % speed potentiometer adjusts the maximum speed that the straightener rolls can rotate regardless of the dancer arm height. It should be set to maintain a constant material feed rate through the straightener.

6. DANCER ARM LOOP HEIGHT AND RANGE ADJUSTMENT

A. Loop Range—The loop range switch adjusts the amount of travel that the dancer arm will move to provide the full range of speed on the straightener. It has three positions with a "0" as the least travel from slowest to fastest speed and a "2" has the most movement between slowest to fastest speed.

B. Loop Height—The loop height switch is used for setting the start position of the control arm. It has three positions with the "0" setting having the start position at the dancer arm rest position and the "2" having the start position somewhat higher than the dancer arm rest position. This setting will determine the dancer arm angle that the reel will start turning. This function is used to accommodate different thickness of material which would have a different bend radius thus requiting the dancer arm to be at a height somewhat above the home position when at rest.

7. LOOP ARM / EXTERNAL SWITCH

This switch is used to select whether the material loop is controlled by the dancer arm or an external loop control. If **LOOP ARM** is selected then the control will monitor the dancer arm movement. If **EXTERNAL** is selected then the control will monitor whatever is plugged into the **"D-SUB"** (25 pin) connector.

8. REMOTE INTERFACE PORT "D" CONNECTOR

This 25 pin connector, located on the lower portion of the console is used to communicate with external loop equipment. The RSB, RTB, & RTA will plug into the port and can immediately be implemented.
CAUTION: NEVER PLUG ANY TYPE OF COMPUTER OR NON RAPID-AIR EQUIPMENT INTO THIS PLUG OR SEVERE DAMAGE COULD RESULT. ALWAYS CONSULT THE FACTORY WHEN INSTALLING DIFFERENT EXTERNAL CONTROLS FOR ADVICE ON COMPATIBILITY AND WIRING INFORMATION.

9. PANEL MOUNTED ELECTRICAL COMPONENT DESCRIPTION

69100034 board—proportional control board
69100076 board—component interface board
69100014 board—(RAMM) D.C. motor control board [120 VAC, 1 PH]
69100038 board—(RAMM) D.C. motor control board [240 VAC, 1 PH]

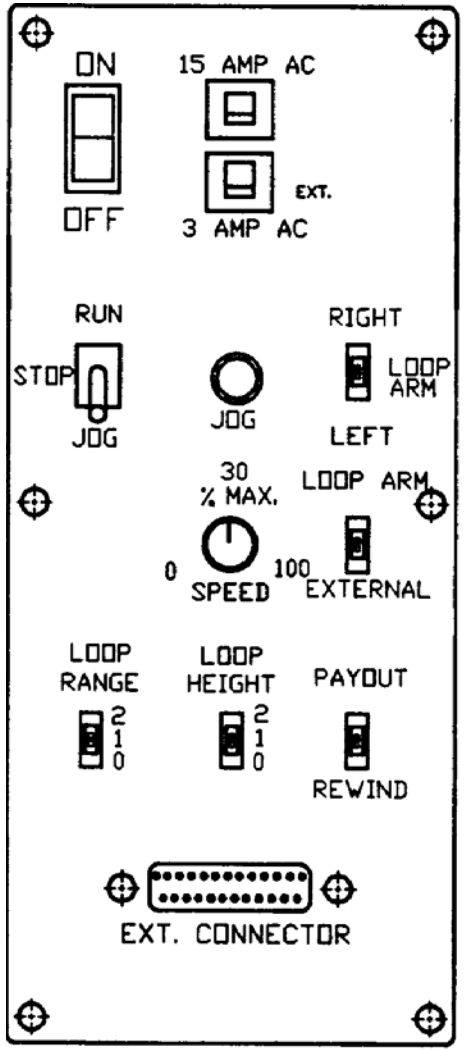

FRONT VIEW

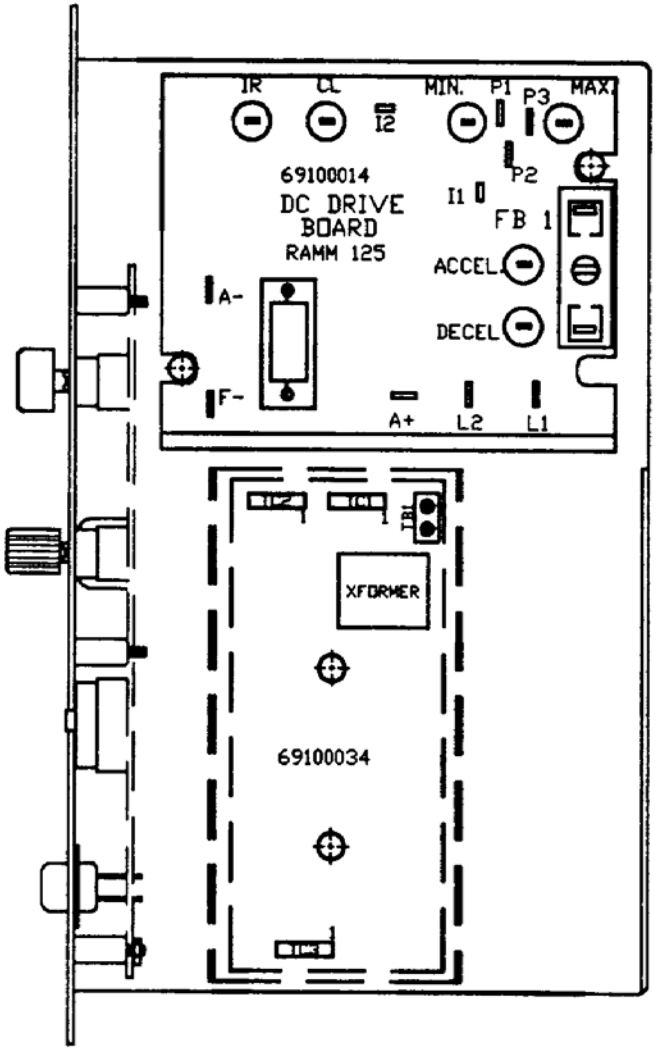

SIDE VIEW

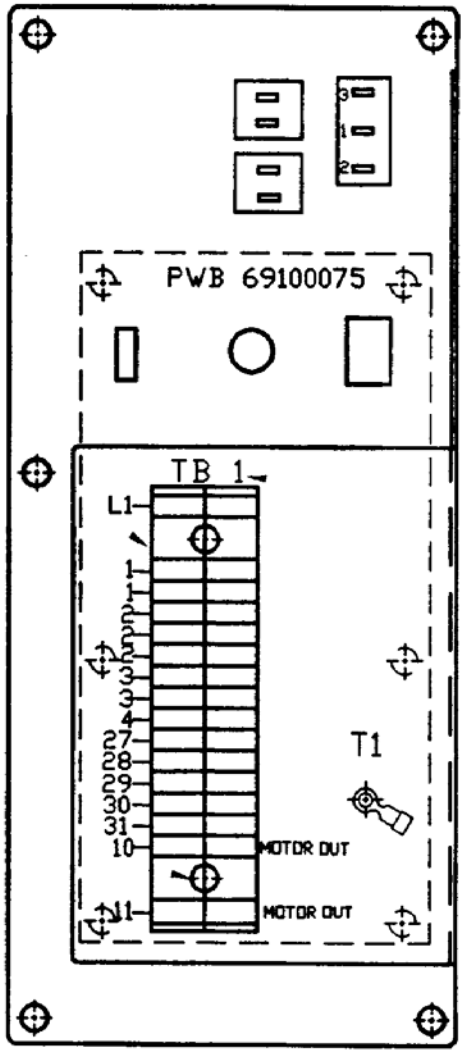

BACK VIEW

1 HP AND LOWER CONTROL

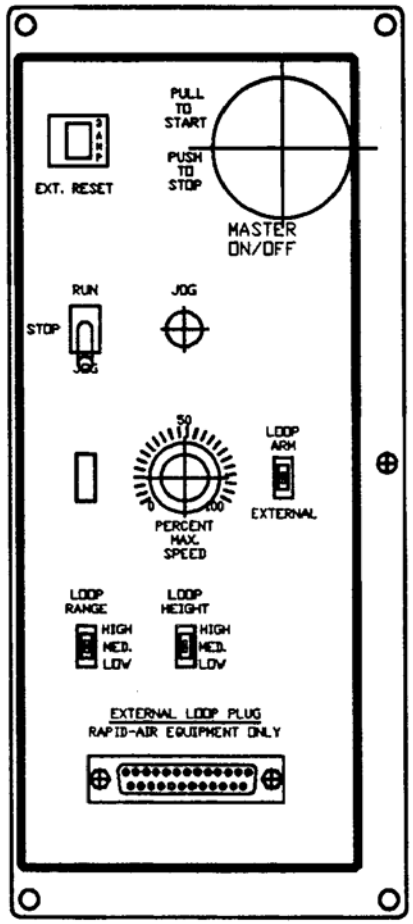

FRONT VIEW

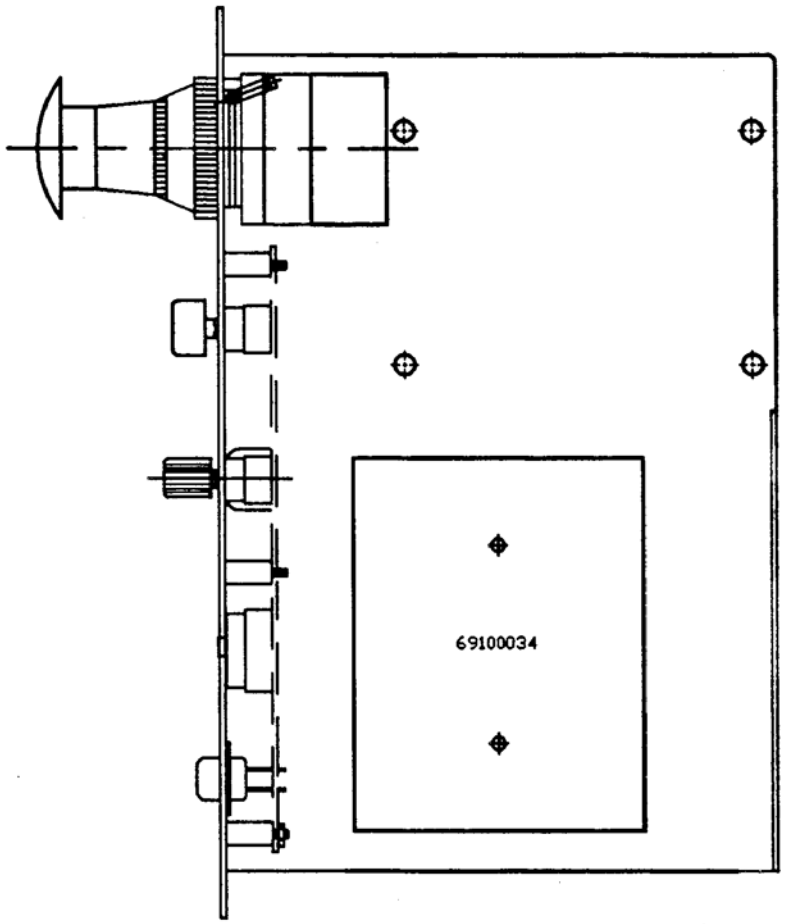

SIDE VIEW

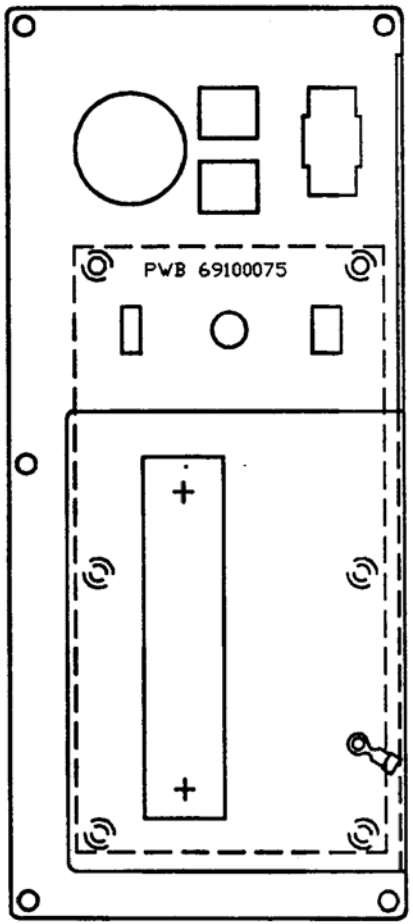

BACK VIEW

2 & 3 HP CONTROL

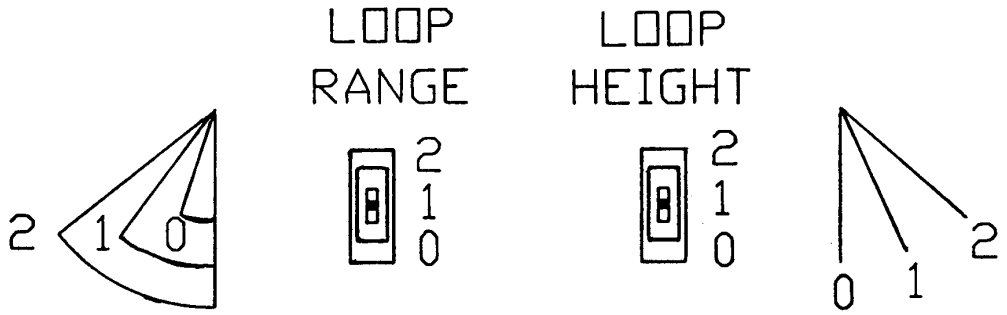

DANCER ARM LOOP HEIGHT ADJUSTMENT
Three different loop sensing arm operating positions are selected manually during set-up. By selecting the higher number, the zero point of the dancer arm is raised from it's rest position to the angle shown (as indicated 0-2). The dancer arm will move from rest position to the angle selected before the pallet reel begins to rotate.

DANCER ARM LOOP RANGE FUNCTION

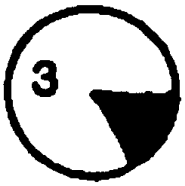

30 degree—Loop sensing arm travels through a full 30 degree arc to vary turntable rotation speed from slow to full speed as controlled by % speed pot.

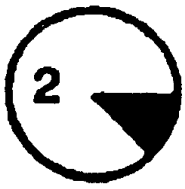

20 degree—Loop sensing arm travel through a 20 degree arc to vary turntable speed from slow to full speed as controlled by % speed pot.

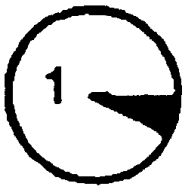

10 degree— Loop sensing arm travels through a 10 degree arc to vary turntable rotation speed from slow to full speed as controlled by % speed pot.

STANDARD STRAIGHTENER COMPONENTS

CURVE UP/DOWN ADJUSTMENT

Some applications have dies that cannot accept anything but flat stock and other dies run better with the material curving up or down to miss the built in edge required in the die. Before this feature was added, operators would under straighten or over straighten the material to suit their needs but in doing so would severely change the material entering the die. This not only caused feeding problems but part quality problems. With this feature, curve up or down can be accomplished by changing the position of the rolls without stressing the material.

ENTRANCE GUIDE ROLL BLOCK

All straighteners are shipped with an entrance guide roll. This contains a roller and two adjustable edge guides.

OPTIONAL STRAIGHTENER COMPONENTS

ENTRANCE CASCADE ROLL

The entrance cascade roll assembly is used to maintain a support arc for stock entering a feed. The cascade roll has three extra rollers to help the material flow better.

EXIT CASCADE ROLL

The straightener is shipped with the exit side pre-drilled for the cascade roll or guide roll block. The entrance and exit use the same components.

ANGLE BRACKET

Rapid Air offers this accessory that mounts between the straightener head and the base. It angles the exit side of the straightener twelve degrees lower than the entrance side. This feature works very well when using the straightener to pull off a non powered reel.

OPERATION

Once the straightener has been tested and all the functions work then it should be tested for what it was designed to do and that is to remove coil set.

Retract all of the idler rolls and the exit pinch roll to a position so when the cover is closed the material is not being deformed. Open the cover of the straightener and position the edge guides for maximum width. Cut and place about a four foot length of the material onto the straightener rolls with the exit end of the material extending through the exit pinch rolls and centered from side to side in the straightener. Close the cover and latch it. Adjust the exit pinch roll enough to grip and hold the material. Adjust the edge guides so that they just touch the material.

Adjust the first idler roll knob, this is the one nearest the entrance of the straightener, so that it deforms the material no more than the thickness of the material. Adjust the second idler roll knob so it is lightly on the roll. Run the material to check that the exit pinch roll is not slipping on the material, readjust if necessary. This piece will still have coil set in the first two feet of the material as it was not run through the complete straightening cycle. At this time, this piece could be rerun and checked for straightness or a new piece could be cut and run and then be checked.

A good check is to guide the exiting material, keeping it parallel to the rolls, until the run is complete and then hold one end of the material in the air while peering down the length of the material. If the material still has "coil set" then readjust roll pressure on the last roll, towards the exit end but before the pinch roll, until the material is straight. Run one or more short length setups while making final adjustments. Once the proper setting has been determined, the quick release top maintains the adjustment during loading.

Thread the material from the reel through the straightener, under the dancer arm, and into the pulling device leaving ample loop between the straightener and the pulling device. If the material thickness is such that when exiting the straightener, it will not let the dancer arm down to the rest position, then either lengthen the dancer arm or adjust the loop height until the straightener stops feeding.

Set the % speed potentiometer to 50% for a starting position and start the pulling device to have the material feeding. If the straightener gets finished and stops before material is needed again then the straightener is set to feed too fast, slow it down by adjusting the % speed potentiometer. The ideal straightening is to have the straightener slightly exceed the feed rate required. This minimizes the starting and stopping and resultant stock deformation.

MAINTENANCE

LUBRICATION

Gear transmission:
The reservoir oil capacity is about 4 OZ. The reservoir oil should be changed every 2000 hours and should be filled the oil level site gauge. Use MOBILE 600W cylinder oil or equivalent. This is a non synthetic oil.

Rolls:
Although the rolls should be cleaned periodically they never have to be greased as all the rolls have permanently lubricated bearings.

Drive Belt:
At the oil change interval, check for belt tension and wear.

TROUBLESHOOTING GUIDE

MAIN SWITCH ON BUT NOT LIT

1. CB tripped
    a. Reset CB
2. Unit not plugged into main power.
    a. Plug into main power source
3. No power in incoming line.
    a. Check outlet.
    b. Check power cord.
4. Loose wiring
    a. Check terminals and connections

MOTOR CREEPS IN STOP POSITION

1. R1 & R3 pot on 69100034 board not correctly adjusted.
    a. Readjust pots so tables stops. Call factory.

UNIT TURNS BUT WON'T JOG

1. Selector switch not in jog position.
    a. Select jog.
2. Jog pot on 69100076 board not adjusted correctly.
    a. Adjust pot. Call factory
3. Maximum speed pot on Ramm board set too low.
    a. Adjust pot.

UNIT ON BUT MOTOR WON'T RUN. (ARMATURE VOLTAGE PRESENT—ON RAMM BOARD)

1. Check motor wiring and fuse.
    a. Replace motor cord and correct motor wiring. Call factory.
2. Check motor
    a. Worn brushed or motor defective. Call factory.

NOTE: Refer to drawing RA-2 for location of components, sequence check from Ramm board to motor.

UNIT ON BUT MOTOR WON'T RUN. (NO ARMATURE VOLTAGE ON RAMM BOARD)

1. Selector switch not in run position.
    a. Turn selector switch to run position

2. If running with dancer arm control.
    a. Check that the external/loop arm switch is in the loop arm position.

3. If running with external control
    a. Check that the external/loop arm switch is in the external position.

4. Height switch setting too high.
    a. Set height setting to “0”.

5. Percent speed pot set too low.
    a. Adjust percent speed pot to 100%.

6. Fuses blown.
    a. Check fuses & circuit breaker.

7. No AC voltage at DC drive board.
    a. Check wiring

8. Check signal voltage between P2 to I2 on DC drive.
    0-6 VDC—Ramm
    0-9 VDC—Regen Drive
    while moving dancer arm
    a. If there is a signal, check continuity between I1 & 12
    b. If no continuity, replace D.C. drive or call factory.

9. Check line voltage input of 69100034 board, 120 VAC, TB-1.
    a. Check wiring. Call factory

10. Check pico fuse 69100034 board (f1).
    a. Replace fuse, 1 amp pico fuse—call factory.

11. Check for 0-12 VDC between pin #1 (=V) and pin #2 (GND) of panduit connector TC3 on board #69100034.
    a. If no voltage present call factory.

12. Check for DC voltage between pin #6 (VO) and pin #2 (GND) of panduit connector TC3, on board 69100034, while moving the dancer arm from minimum to maximum position.
    a. If voltage is present, turn power off and check the ribbon cable connections between panduit connector #TC3 of 69100034 board and panduit connector #TB-4 of 69100076 board. This should be a continuity check for tight connections. Call factory for assistance.
    b. If voltage is not present move on to step 13.

13. Check voltage between pin #5 of TB-6 & pin #3 of TB-5 on 69100076 board while moving the dancer arm from minimum to maximum position.
    a. If voltage varies 2.5-4 volt from minimum to maximum position, the dancer arm pot is OK, but the 69100076 board could be defective. Call factory.
    b. If voltage does not vary when moving the dancer arm from minimum to maximum position—call the factory for assistance.

69100034 TAUT STOCK OUTPUT

The 69100034—Proportional control board has a taut stock output. The output must be wired to a solid state relay as the max current draw is 20 MA. The solid state relay's contact can then be incorporated into the electrical control circuitry.

The output can be wired so that the relay is either on or off with the dancer arm down. When the dancer arm reaches the set point for taut stock, the relay switches state.

The taut stock height set point is set by raising the dancer arm to a position that the material is taut and then adjusting pot R7 so the output changes state. Lower and raise the dancer arm a few times to check that the set point repeats and then the set point repeats and then the task is finished.

The potentiometer that is located just below the taut stock terminal strip is used for presetting the max voltage output requirement for a particular drive. A Ramm DC drive needs 6 VDC for max motor speed so turn the pot fully counter clockwise. A minarik drive board needs 10 VDc for max motor speed so turn the pot fully clockwise.

The following is a brief wiring diagram for the taut stock.

3	GRD
2	10 VDC out with dancer arm down
1	0 VDC out with dancer arm down

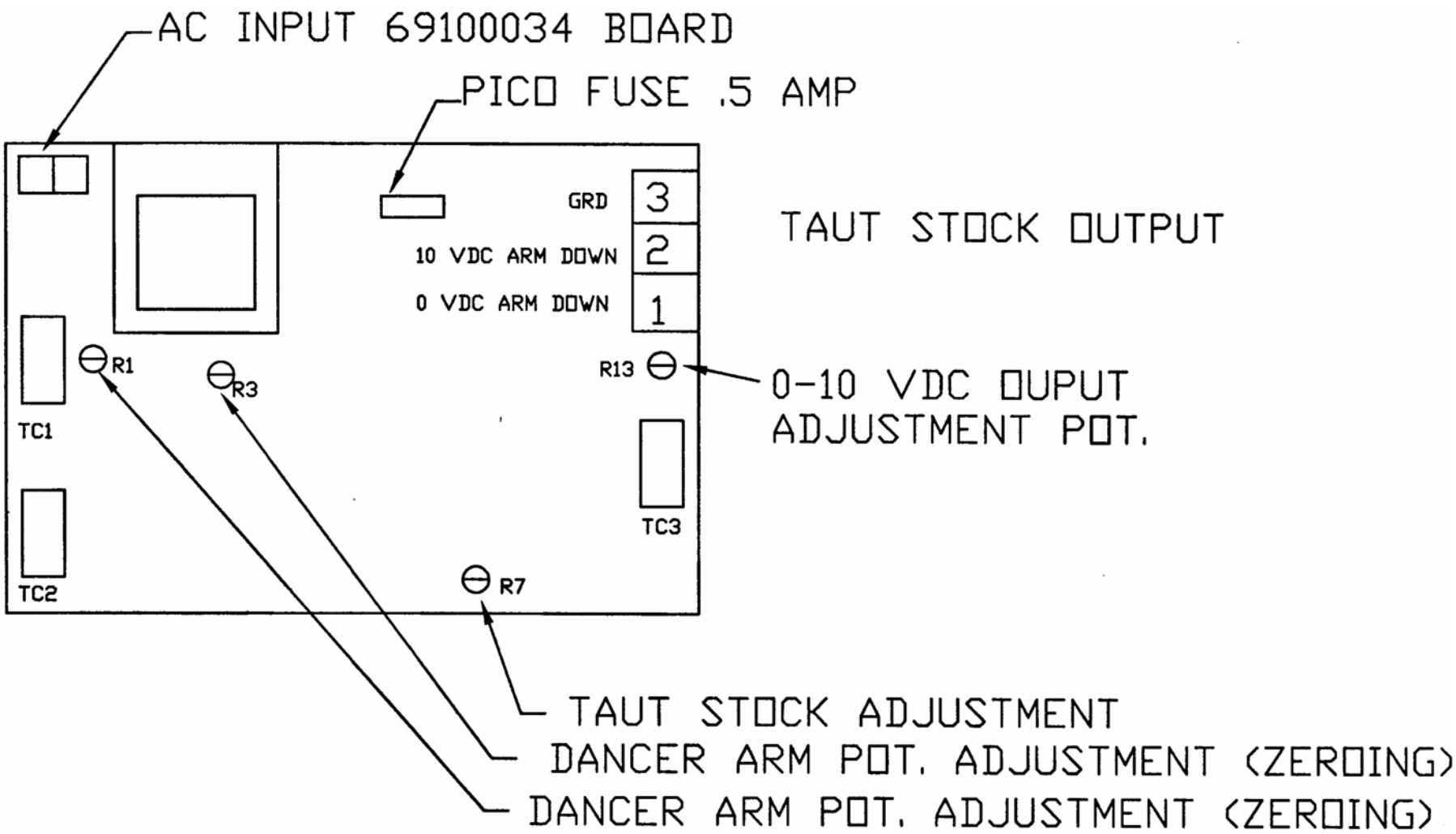

TAUT STOCK BOARD

RAPID-AIR CORPORATION

RAMM
SOLID STATE
DC MOTOR
SPEED CONTROL

SAFETY WARNING—PLEASE READ CAREFULLY

This product should be installed and serviced by a qualified technician, electrician or electrical maintenance personnel familiar with its operations and the hazards involved. Proper installation (see instruction information which accompanies product), which includes wiring, mounting in proper enclosure, fusing or other overcurrent protection and grounding, can reduce the chance of electrical shocks, fires or explosion in this product or products used with this product, such as electric motors, switches, coils solenoids and/or relays. Eye protection must be worn when working with control under power. This product is constructed of materials (plastics, metals, carbon, silicon, etc.) which may be a potential hazard. Individual material safety data sheets (MSDS) are available upon request. Proper shielding, grounding and filtering of this product can reduce the emission of radio frequency interference (RFI) which may adversely affect sensitive electronic equipment. If information is required on this product, contact our factory. It is responsibility of the ultimate user of this product to read and comply with this safety warning. (SW effective 1/89).

*****IMPORTANT*****
YOU MUST READ THESE INSTRUCTIONS BEFORE OPERATING CONTROL.

1. Be sure AC line voltage corresponds to control voltage.

2. Install the correct Plug-In Horsepower Resistor according to armature voltage and motor horsepower.

3. Recheck connections: AC line to L1 and L2; armature to A+ and A– and field (Shunt motors only to F+ and F-.) (Note: If motor runs in improper direction, interchange armature leads).

4. Install proper AC line fuse and armature fuse as required.

5. Nominal trimpot settings are as follows (expressed in % of full CW rotation):

TABLE 1: NOMIMAL TRIMPOT SETTINGS

MIN (minimum speed): 15%	CL (current limit/torque): 65%
MAX (maximum speed): 65%	ACCEL (acceleration start): 20%
IR (IR compensation): 25%	DECEL (deceleration stop): 20%

PLUG IN HORSEPOWER RESISTOR

A Plug-In Horsepower Resistor must be installed to match the RAMM to the motor horsepower and voltage. See table 2 for the correct value. Plug-In Horsepower Resistors are stocked by your distributor.

TABLE 2. PLUG IN HORSEPOWER RESISTOR CHART*

MOTOR HORSEPOWER RANGE**		Plug-in Horsepower Resistor Resistance Value (ohms)	Rapid-Air Part Number
Armature Voltage 90-130 VDC	Armature Voltage 180 VDC		
1/4	1/2	.05	69100529
1/2	1	.025	69100530
3/4	1-1/2	.015	69100534
1***	2***	.01	69100531

*Motor horsepower and armature voltage must be specified when ordering so that proper resistor will be supplied.
** For overlapping motor horsepower range use lower value Plug-In Horsepower Resistor.
*** Auxiliary heat sink must be used to achieve HP rating.

INTRODUCTION

The **RAMM** Full Wave Solid State DC Motor Speed Control represents the latest state of the art design achievable through modern technology.

Features include:

Integrated Circuitry

Used to control and amplify command and reference levels with both closed and open loop feedback to provide superior motor regulation. (Speed changes due to load, line voltage, or temperature variations are held to minimum levels.)

High Quality Components

Selected and tested for proven dependability.

Transient Protection

Used to prevent failure of the power bridge circuit caused by voltage spikes on the AC line.

High Reliability

When used in accordance with the instructions in this manual, the RAMM will provide years of trouble free operation.

A. Initial Setup and Wiring

i. General Instructions

1. Install proper size Plug In Horsepower Resistor.
   (see table 2)
2. The **RAMM** can be connected to a standard 120V or 240V 50/60 Hz AC line (be sure the AC input voltage corresponds to the control voltage rating and the motor rating (e.g. 90-130 VDC motor on 120 VAC and 180 VDC motor on 240 VAC).
3. Follow the recommended supply wire sizes as per table 3.
4. Follow the NEC and other electrical codes that apply.

CAUTION: SEPARATE BRANCH PROTECTION MUST BE PROVIDED ON 240V CIRCUITS.

5. Connect control in accordance to connection diagram.

TABLE 3. MINIMUM SUPPLY WIRE SIZE REQUIREMENTS

MAX. MOTOR AMPS (DC AMPS)	MAX. MOTOR HP 90V	MAX. MOTOR HP 180V	MINIMUM WIRE SIZE (AWG) Cu only	
			MAX. MOTOR RUN	MAX. MOTOR RUN
6.0	1/2	1	16	14
12.0	1	2	14	12*
16.0	1 1/2	3	12	12

*Maximum recommended wire size

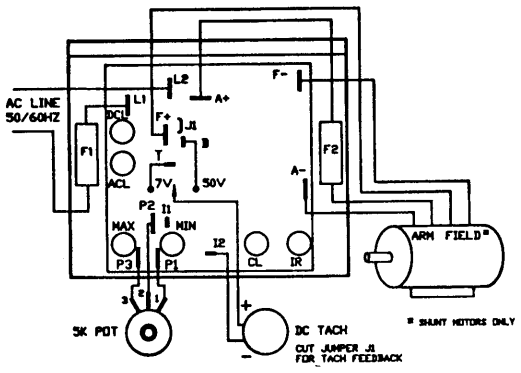

Fig. 1. Basic RAMM Connection Diagram

CAUTION: Do not bundle potentiometer connections (P1, P2, P3) and inhibit Connections (I1, I2) with AC line or motor wires.

B. VOLTAGE FOLLOWING. All models can be controlled with an isolated analog reference voltage (0-6VDC) in lieu of the main speed potentiometer. The voltage is connected to P2 (+) and F-. The control output voltage will linearly follow the input voltage. The source impedance of the input should be 10k ohms or less. The Min trimpot can be used to provide an offset speed. If an offset is not required adjust the Min to 0+ or 0– speed as desired. The Max trimpot is rendered inoperative in the voltage following mode. Use auxiliary trimpot to limit the control range. If the input signal is not isolated, or is a current signal (4-20ma), the RA-SI240D Signal Isolator must be used. It will allow direct connection to process controllers and microprocessors.

Caution: 1. The voltage feeding P_2 and F– must be isolated form the AC line. Do not ground P_2 or F– to set up a zero ground reference. 2. Do not bundle signal wires to P_2 and F– with AC line motor connections. If signal wires are over 18”, use shielded cables.

C. FUSING. The **RAMM** has provision for a built in AC line fuse and armature fuse. The AC line fuse protects the control against catastrophic failure. If the fuse blows, the control is mis-wired, the motor is shorted or grounded, or the **RAMM** control is defective. The armature fuse provides overload protection for the motor and control. Choose the proper size armature fuse by multiplying the maximum DC motor amps by 1.7. On domestic 240 Volt AC lines, separate branch circuit protection for each line must be used. All fuses should be normal blow ceramic 3AG or ABC or equivalent.

1. AC Line Fuse is chosen according to the maximum rating of the control:
   12 AMP fuse for all motors up to 3/4 HP-90V and 1 1/2 HP-180VDC.
   25 AMP fuse for all motors 1 and 1 1/2 HP-90V and 2 and 3 HP-180VDC.

(Use Buss ABC, Littlefuse 326 ceramic fuse or equivalent.)

2. Armature Fuse can be chosen in accordance with the fuse chart. Note: The armature fuse is calculated based on the approximate full load DC current rating of the motor times a form factor of 1.5. If motor has characteristics not consistent with these approximations, a different fuse value may have to be used. Fuses are available from your distributor.

TABLE 4. ARMATURE FUSE CHART

90VDC MOTOR	180VDC MOTOR	APPROX. DC MOTOR CURRENT (AMPS)	FUSE RATING (AC AMPS)
HORSEPOWER			
1/4	1/2	2.5	4
1/2	1	5.0	8
3/4	1 1/2	7.5	12*
1	2	10.0	15
1 1/2	3	15.0	25*
*Also used as AC line Fuse.			

ADJUSTMENTS AND CONTROL FUNCTIONS

WARNING: If adjustments are made under power, insulated adjustment tools must be used and eye protection must be worn.

The **RAMM** has been factory adjusted to provide 0-full speed using the speed control knob. Minimum and Maximum speed trimpots are provided to change the speed from other than 0-full speed. The Acceleration (ACCEL) trimpot is provided to allow for a smooth start over an adjustable time period each time the AC power is applied or the speed pot is rotated. The DECEL trimpot controls the amount of ramp-down when the speed pot is adjusted to a lower speed. The Current Limit (CL, or torque output) adjustment is factory set to approximately 1 1/2 times the motor rating. The IR Compensation (IR) is factory adjusted to provide excellent motor regulation under normal operation.

NOTE: In order for the IR comp and CL trimpot settings to be correct, the proper Plug-in Horsepower Resistor must be installed for the particular motor and input volt age being used. Do no attempt to change the settings of the trimpots unless absolutely necessary since they are factory adjusted to near optimum settings.

The following procedure, presented in order of adjustment sequence, should be used when readjusting all trimpot functions.

Fig 2. ACCEL/DECEL TRIMPOT ADJUSTMENT

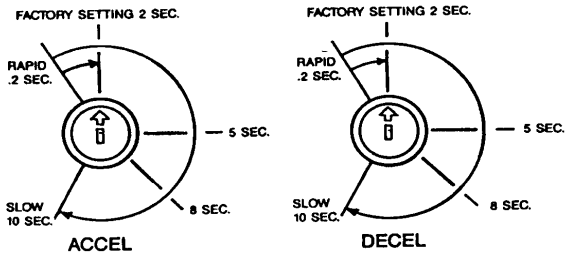

A. Acceleration Start. The ACCEL is factory set at approximately .2 seconds. To readjust to different times, set the knob to the desired position as indicated in Fig 2.

B. Deceleration. The DECEL is factory set to provide a ramp-down time of .2 seconds. To change the ramp-down time, adjust the DECEL trimpot as indicated in Fig 2.

C. Minimum Speed Adjustment. If a higher than zero minimum speed is desired, readjust the minimum speed by turning the speed control knob to zero setting (full CCW position). Then adjust the Min. Speed trimpot to the desired setting.

NOTE: The min. speed adjustment will affect the max. speed setting. Therefore, it is necessary to readjust the max. speed after the min. speed is adjusted.

D. Maximum Speed Adjustment. Turn Speed Control Knob to full speed (maximum CW position). Adjust max. speed trimpot to new desired setting.

NOTE: Do not attempt to adjust the max. speed above the rated motor RPM since unstable motor operation may occur. For moderate changes in the max. speed, there will be a slight effect on the min. speed setting.

E. Current Limit (CL/Torque Adjustment). CL circuitry is provided to protect the motor and control against overloads. The CL also limits the inrush current to safe level during startup. The CL is factory set to approximately 1.5 times the full load rating of the motor. (CL trimpot is nominally set to approximately 65% of full CW rotation.)

To set the CL to factory specification adjust as follows:

1. Set speed control knob at approximately 30-50% CW rotation.
   Set CL trimpot to full CCW position.
2. Connect a DC ammeter in series with the armature lead.
3. Lock shaft of motor (be sure CL pot is in full CCW position).
   Apply power and rotate CL pot CW slowly until DC ammeter reads 1.5 times motor rating (do no exceed 2 times motor rating, Max. CW position.)

NOTE: If only an AC ammeter is available, it can be installed in series with the AC line. Follow above instructions; however, set AC amperage at .75 times motor rating.

F. IR Compensation Adjustment. IR compensation is provided to substantially improve load regulation. If the load presented to the motor does not vary substantially, the IR adjustment may be set at a minimum level (approximately 1/4 of full setting). The control is factory adjusted to approximately 3% regulation. If superior performance is desired (less than 1% speed change of base speed from 0 to full load), then the IR comp. should be adjusted as follows.

NOTES:
1. Excessive IR comp. Will cause control to become unstable, which causes motor cogging.
2. For tach feedback applications the IR comp can be set to minimum rotation (full CCW).

1. Set IR comp. Trimpot at approximately 25% of CW rotation. Run motor unloaded at approximately 1/3 speed and record RPM.
2. Run motor with maximum load and adjust IR comp. trimpot so that the motor speed under load equals the unloaded speed per step 1.
3. Remove load and recheck unloaded RPM. If unloaded RPM has shifted, repeat procedure for more exact regulation.

The **RAMM** is now compensated to provide minimal speed change under large variations of applied load.

LIMITED WARRANTY—RAMM 125, 225, 225D

For a period of one (1) year from date of original purchase Rapid-Air Corporation will repair or replace without charge devices which our examination proves to be defective in material or workmanship. This warranty is valid if the unit has not been tampered with by unauthorized persons, misused, abused or improperly installed and has been used in accordance with the instructions and/or ratings supplied. The foregoing is in lieu of any other warranty or guarantee expressed or implied, and we are not responsible for any expense (including installation and removal), inconvenience, or consequential damage, including injury to any person, caused by items of our manufacture and/or sale. Some states do not allow certain exclusions or limitations found in this warranty so that they may not apply to you. In any event, Rapid-Air Corporation's total liability, under all circumstances, shall not exceed the full purchase price of this unit.

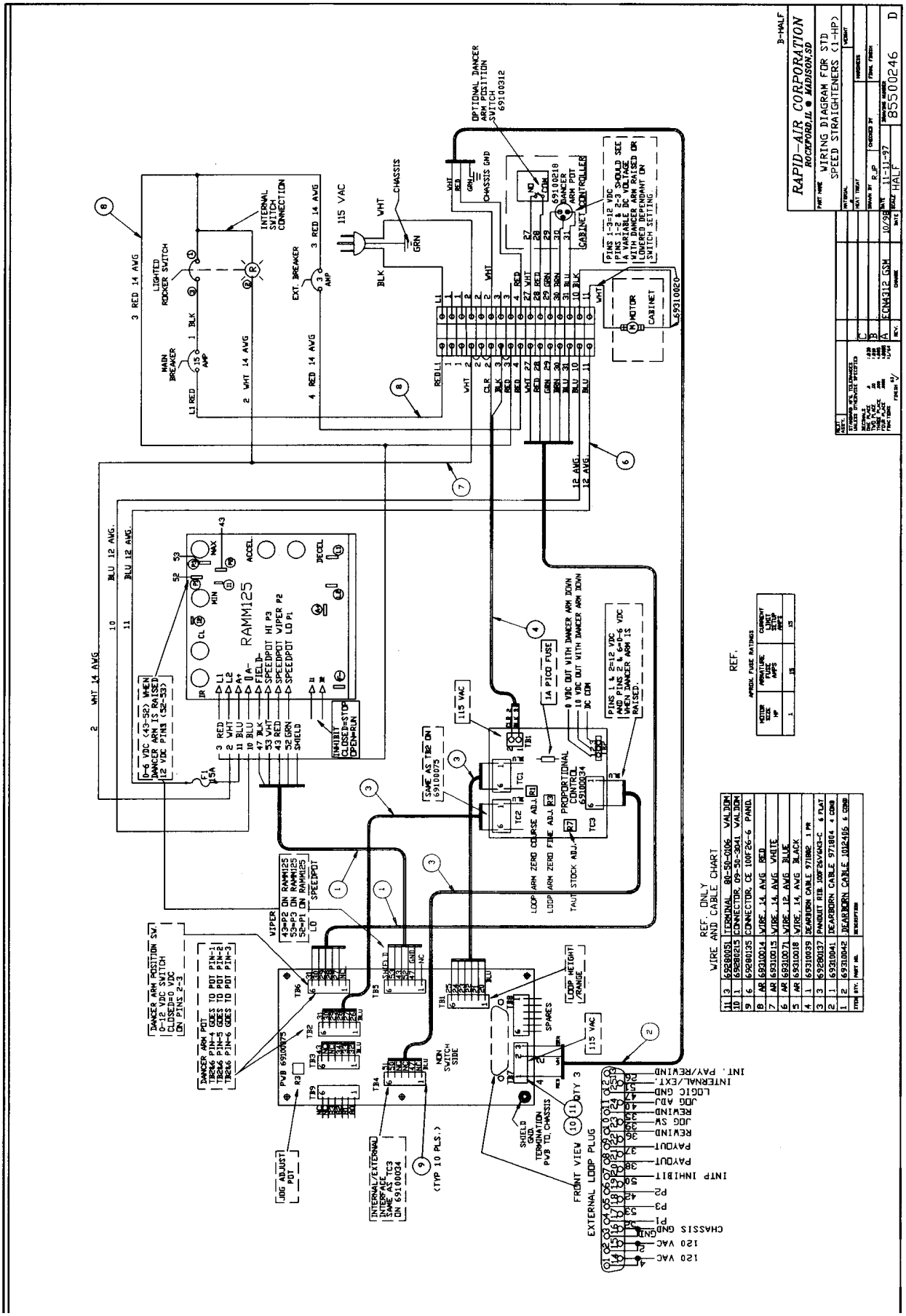
RAPID-AIR CORPORATION
ROCKFORD, IL • MADISON, SD
WIRING DIAGRAM FOR STD SPEED STRAIGHTENERS (1-HP)
8500246
D-HALF
RAMM125
115 VAC
CHASSIS
INTERNAL SWITCH CONNECTION
LIGHTED ROCKER SWITCH
MAIN BREAKER
EXT. BREAKER
OPTIONAL DANCER ARM POSITION SWITCH 69100312
CABINET CONTROLLER
CABINET MOTOR
PROPORTIONAL CONTROL 69100034
1A PICO FUSE
SAME AS TB2 ON 69100075
PVB 69100075
JOG ADJUST POT
INTERNAL/EXTERNAL SWITCH SAME AS TC3 ON 69100034
(TYP 10 PLS.)
NON SWITCH SIDE
SPARES
LOOP HEIGHT /RANGE
SHIELD GND. TERMINATION PVB TO CHASSIS
FRONT VIEW
EXTERNAL LOOP PLUG
INT. PAY/REWIND
INTERNAL/EXT.
LOGIC GND
JOG ADJ
REWIND
JOG SW
REWIND
PAYOUT
PAYOUT
INTP INHIBIT
P2
P3
P1
CHASSIS GND
120 VAC
120 VAC
REF. ONLY
WIRE AND CABLE CHART
REF.
APPROX. FUSE RATINGS

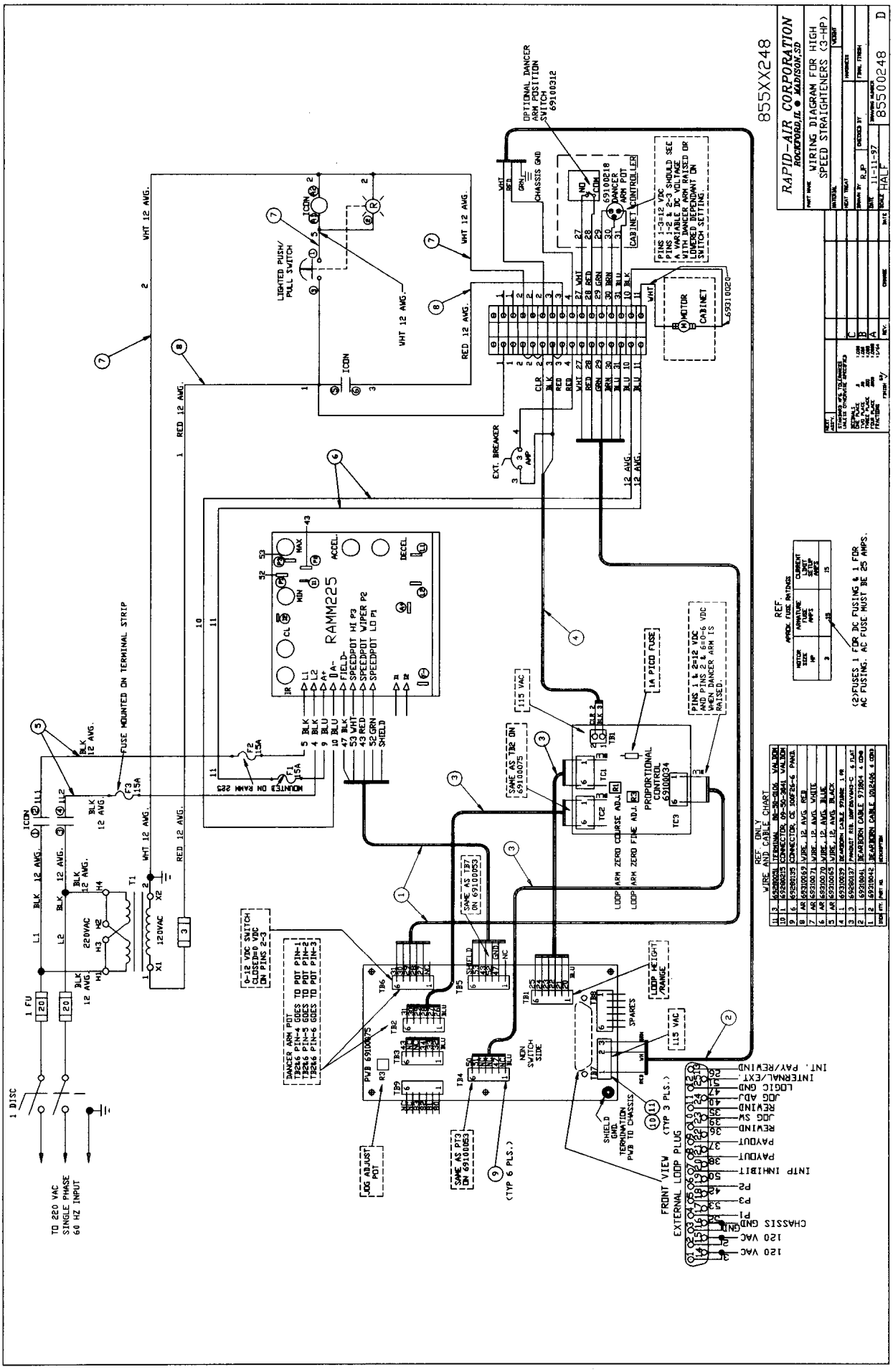
RAPID-AIR CORPORATION
ROCKFORD, IL • MADISON, SD
WIRING DIAGRAM FOR HIGH SPEED STRAIGHTENERS (3-HP)
855XX248
85500248
11-11-97
HALF
RAMM225
MONITOR ON RAMM 225
FUSE MOUNTED ON TERMINAL STRIP
TO 220 VAC SINGLE PHASE 60 HZ INPUT
1 DISC
1 FU
220VAC
120VAC
LIGHTED PUSH/ PULL SWITCH
OPTIONAL DANCER ARM POSITION SWITCH 69100312
DANCER ARM POT 69100218
CABINET CONTROLLER
MOTOR
CABINET
69310020
EXT. BREAKER
PROPORTIONAL CONTROL 69100034
LOOP ARM ZERO COARSE ADJ.
LOOP ARM ZERO FINE ADJ.
1A PICO FUSE
115 VAC
SAME AS TB2 ON 69100075
SAME AS TB7 ON 69100053
SAME AS PT3 ON 69100053
PWB 69100075
DANCER ARM POT TB26 PIN-4 GOES TO POT PIN-1 TB26 PIN-5 GOES TO POT PIN-2 TB26 PIN-6 GOES TO POT PIN-3
0-12 VDC SWITCH CLOSED=0 VDC ON PINS 2-3
LOOP HEIGHT /RANGE
SPARES
NON SWITCH SIDE
SHIELD GND. TERMINATION PWB TO CHASSIS
(TYP 3 PLS.)
(TYP 6 PLS.)
FRONT VIEW EXTERNAL LOOP PLUG
INT. PAY/REWIND
INTERNAL/EXT.
LOGIC GND
JOG ADJ
REWIND
JOG SW
REWIND
PAYOUT
PAYOUT
INTP INHIBIT
P2
P3
P1
CHASSIS GND
120 VAC
120 VAC
JOG ADJUST POT
REF. APPROX. FUSE RATINGS
(2)FUSES 1 FOR DC FUSING & 1 FOR AC FUSING. AC FUSE MUST BE 25 AMPS.
REF. WIRE AND CABLE CHART

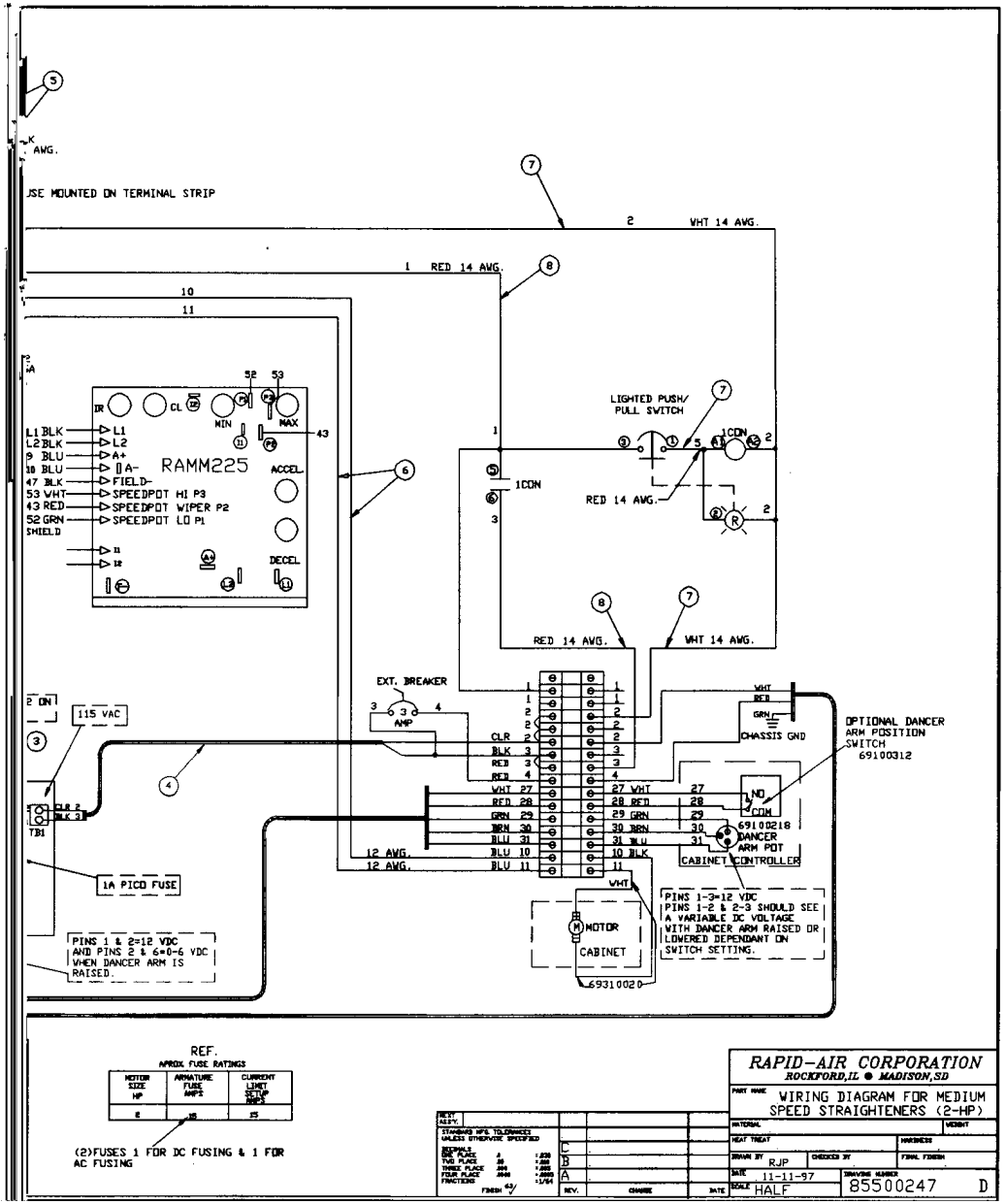
JSE MOUNTED ON TERMINAL STRIP
WHT 14 AWG.
RED 14 AWG.
RAMM225
L1 BLK
L2 BLK
9 BLU
10 BLU
47 BLK
53 WHT
43 RED
52 GRN
SHIELD
FIELD-
SPEEDPOT HI P3
SPEEDPOT WIPER P2
SPEEDPOT LO P1
ACCEL
DECEL
MIN
MAX
LIGHTED PUSH/ PULL SWITCH
1CON
EXT. BREAKER
AMP
115 VAC
TB1
1A PICO FUSE
CHASSIS GND
OPTIONAL DANCER ARM POSITION SWITCH 69100312
69100218 DANCER ARM POT
CABINET CONTROLLER
MOTOR
CABINET
69310020
12 AWG.
PINS 1 & 2=12 VDC AND PINS 2 & 6=0-6 VDC WHEN DANCER ARM IS RAISED.
PINS 1-3=12 VDC PINS 1-2 & 2-3 SHOULD SEE A VARIABLE DC VOLTAGE WITH DANCER ARM RAISED OR LOWERED DEPENDANT ON SWITCH SETTING.
REF.
APROX FUSE RATINGS
MOTOR SIZE HP
ARMATURE FUSE AMPS
CURRENT LIMIT SETUP AMPS
(2)FUSES 1 FOR DC FUSING & 1 FOR AC FUSING
RAPID-AIR CORPORATION
ROCKFORD,IL ● MADISON,SD
WIRING DIAGRAM FOR MEDIUM SPEED STRAIGHTENERS (2-HP)
RJP
11-11-97
HALF
85500247
D

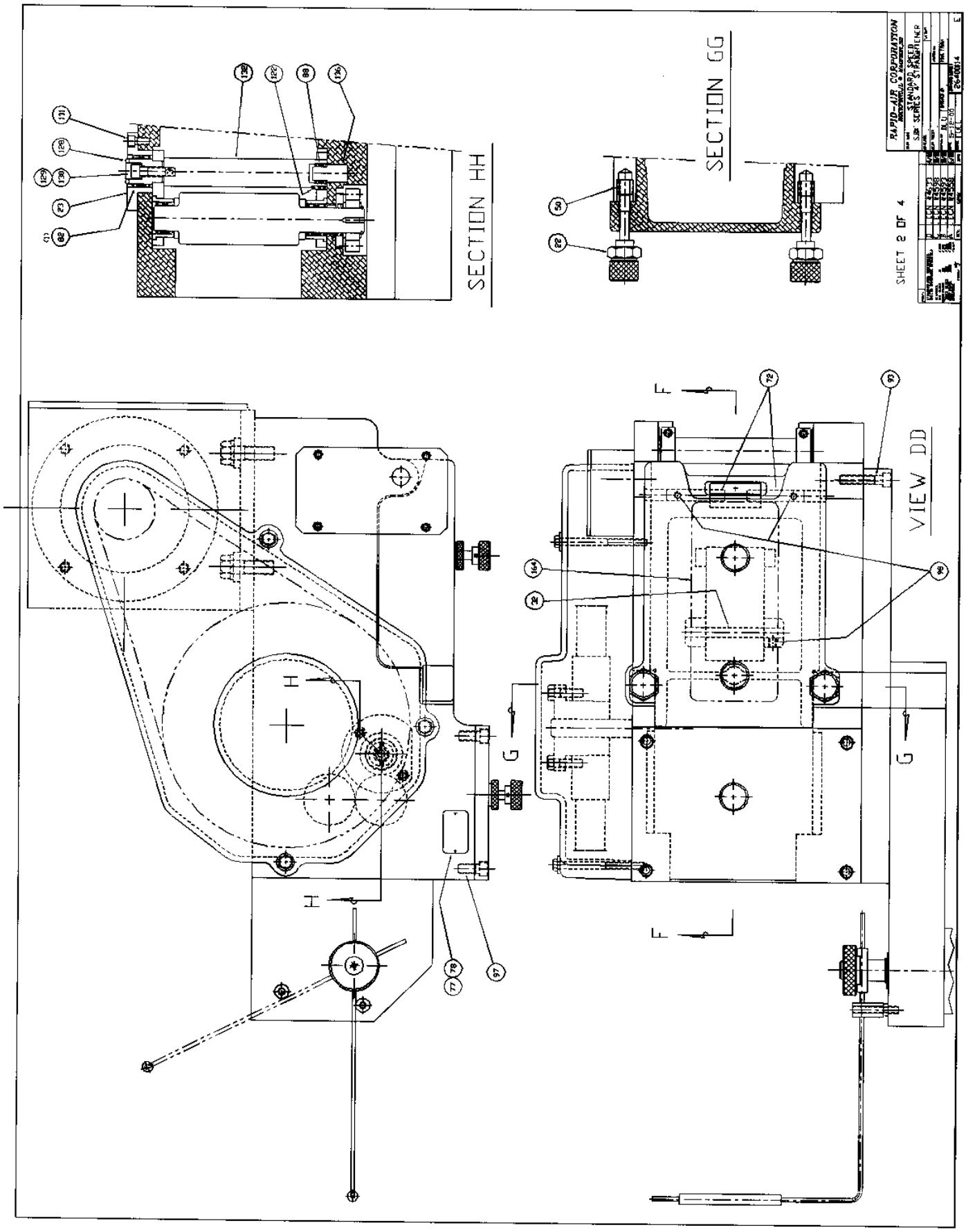
SECTION HH
SECTION GG
VIEW DD
RAPID-AIR CORPORATION
STANDARD SPEED
SHEET 2 OF 4

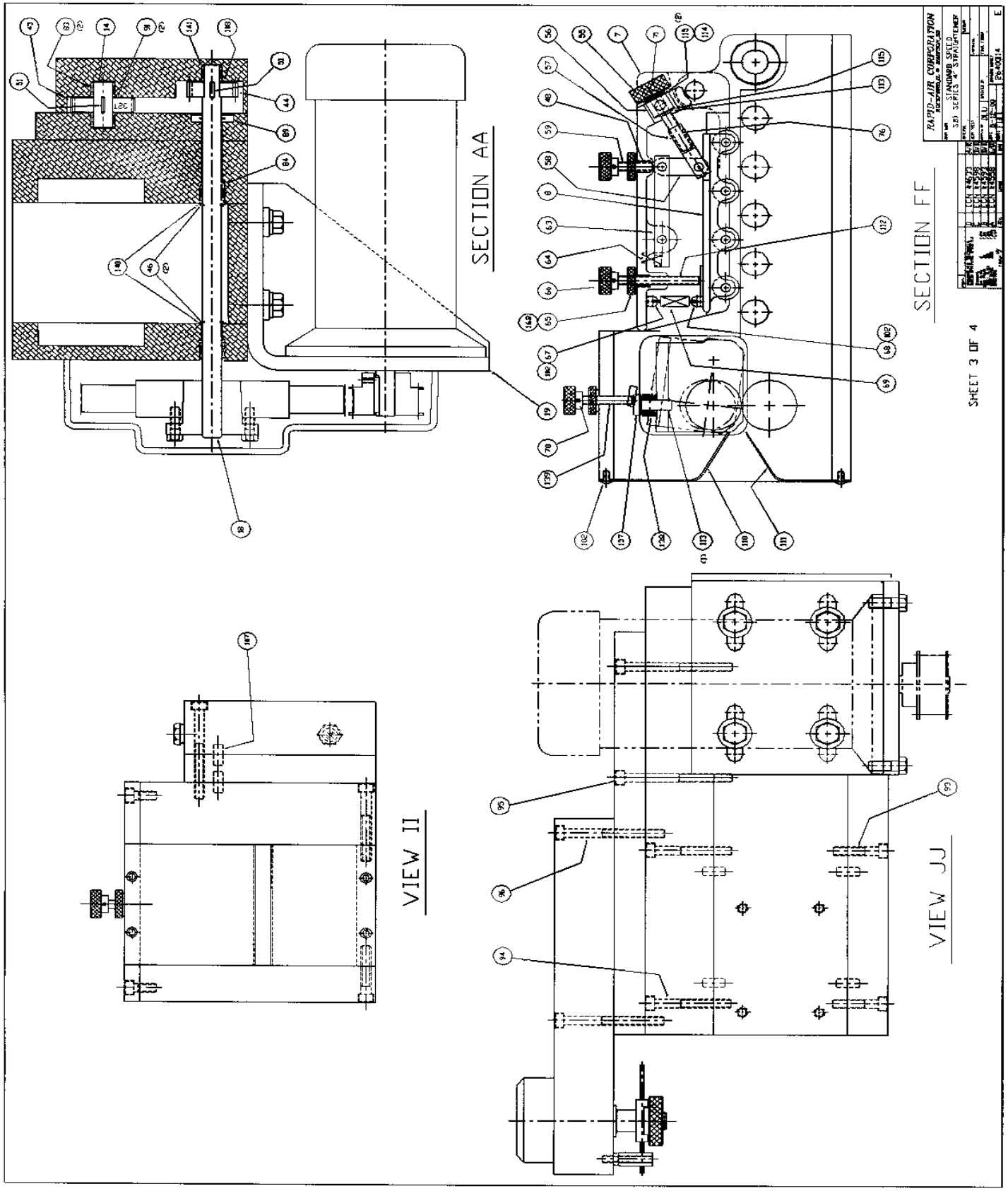
SECTION AA
SECTION FF
VIEW II
VIEW JJ
RAPID-AIR CORPORATION
STANDARD SPEED
SHEET 3 OF 4

DRIVE SCREW
NAME PLATE
HORZ ADJ. SCREW
OIL SEAL
DOWEL PIN
PULL DOWEL
PULL DOWEL
ROLL PIN
ROLL PIN
SPRING
BOTTOM SPRING ANCHOR
TOP SPRING ANCHOR
ADJ. KNOB
KNURLED LOCKNUT
SPRING
UPPER LINK
BREATHER
OIL SIGHT
PIPE PLUG 3/8 NPT
STUD
LINK
HORZ ADJ. BLOCK
PIVOT BLOCK
ADJ. KNOB
IDLER SHAFT
KEY
SPRING
KEY
THREADED INSERT
COLLAR (STAFFORD 47L143)
THREADED INSERT
RETAINING RING
RETAINING RING
RETAINING RING
SPUR GEAR 24T
SPUR GEAR 32T
SPUR GEAR 72T
SPUR GEAR 64T
GEAR
PULLEY
PULLEY W/OD BUSHING
TIMING BELT
PINNION
RACK
IDLER ROLLER
PIVOT SHAFT
HINGE PIN
HINGE PIN
PIVOT SHAFT
SPACER
SPACER
DANCER SHAFT
[illegible]
SPACER
SPACER
ECC. BRG. HOUSING
KNOB SHAFT
ROLLER BRACKET
TOP PLATE
MOTOR MTG. BRKT.
MOTOR DRIVE SHAFT
GUIDE SHAFT
LOWER ROLLER
UPPER ROLLER
IDLER SHAFT
IDLER ROLLER
LOWER ROLLER
LOWER DRIVE SHAFT
RACK HSG. COVER
RACK HOUSING
PLATTEN HOUSING
TOP COVER HOUSING
BELT COVER HOUSING
GEAR COVER PLATE
GEAR SPACER PLATE
L.H. SIDE PLATE
R.H. SIDE PLATE
BASE PLATE

DESCRIPTION

AIR CORPORATION

PERU, IL & MADISON, WI

STANDARD SPEED

SERIES 4" STRAIGHTENER

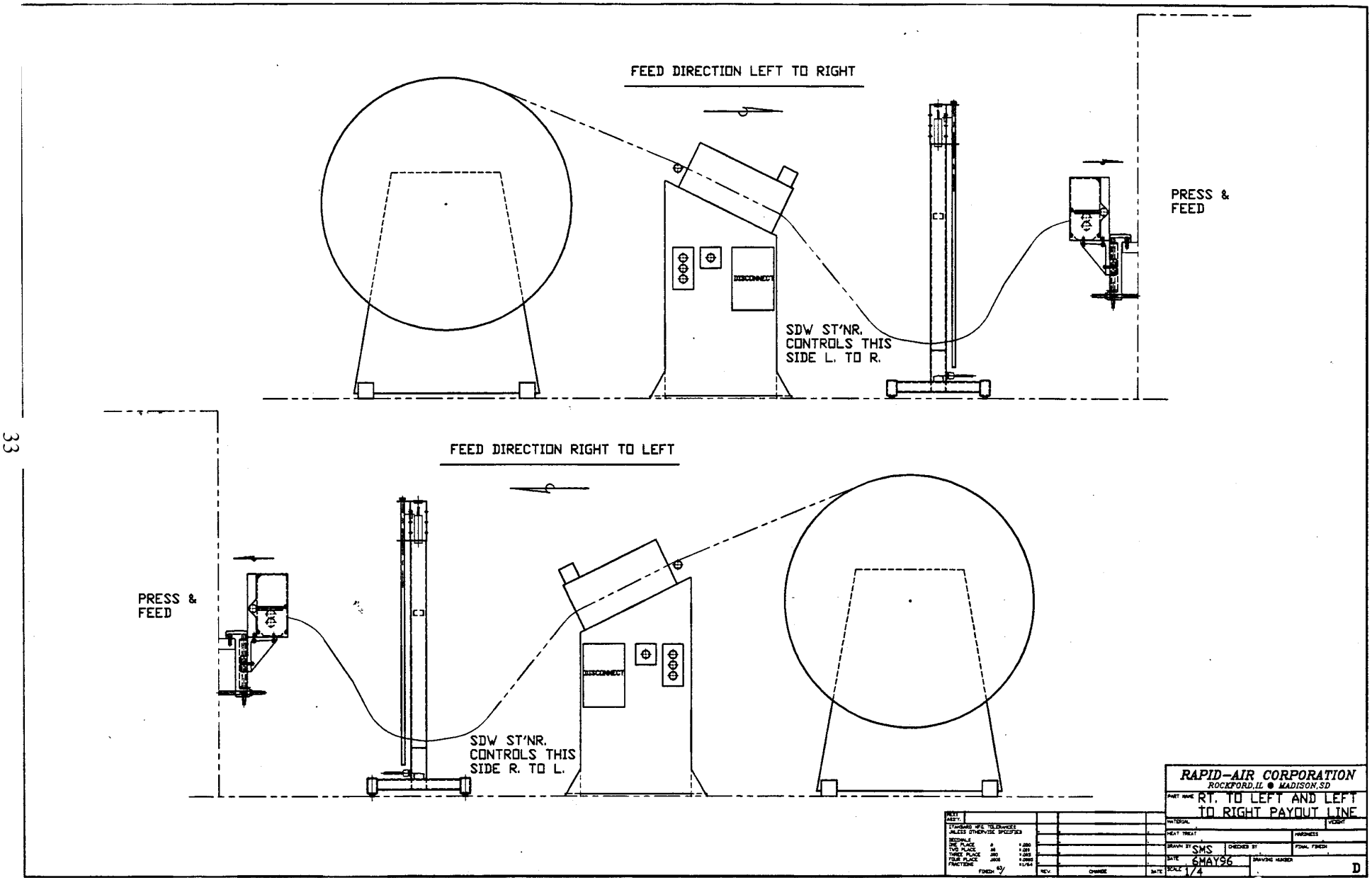
FEED DIRECTION LEFT TO RIGHT
PRESS & FEED
DISCONNECT
SDW ST'NR. CONTROLS THIS SIDE L. TO R.
FEED DIRECTION RIGHT TO LEFT
PRESS & FEED
DISCONNECT
SDW ST'NR. CONTROLS THIS SIDE R. TO L.
RAPID-AIR CORPORATION
ROCKFORD, IL ● MADISON, SD
PART NAME RT. TO LEFT AND LEFT TO RIGHT PAYOUT LINE
MATERIAL
WEIGHT
HEAT TREAT
HARDNESS
DRAWN BY SMS
CHECKED BY
FINAL FINISH
DATE 6MAY96
DRAWING NUMBER
SCALE 1/4
D
REV.
CHANGE
DATE